HSF

NOTES:
Rated Current:18.0 AMP
Contact Resistance:8.0 milliohm Max
Withstand Voltage:2000 V AC/DC
Insulation Resistance:1000 Megohm min
Operation Temperature:−40℃ to +105℃

Housing Material:PA66+30%GF(UL94V−0)
Contact Material:Brass
Terminal Plating:
Matte Tin Plated Over Nickel

Ordering Information:

P M 762- 1 R XX A SM 3

- M: M=Male
- Picth: 762=7.62
- No.of Pins: 02-20P
- Color: A=Green
- Contact Plated: SM=Matte Tin
- Series No.: 3

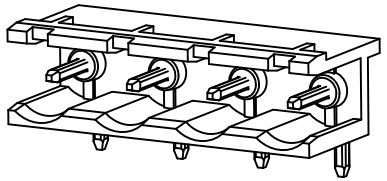

3D VIEW(REF.)
SCALE 1:2

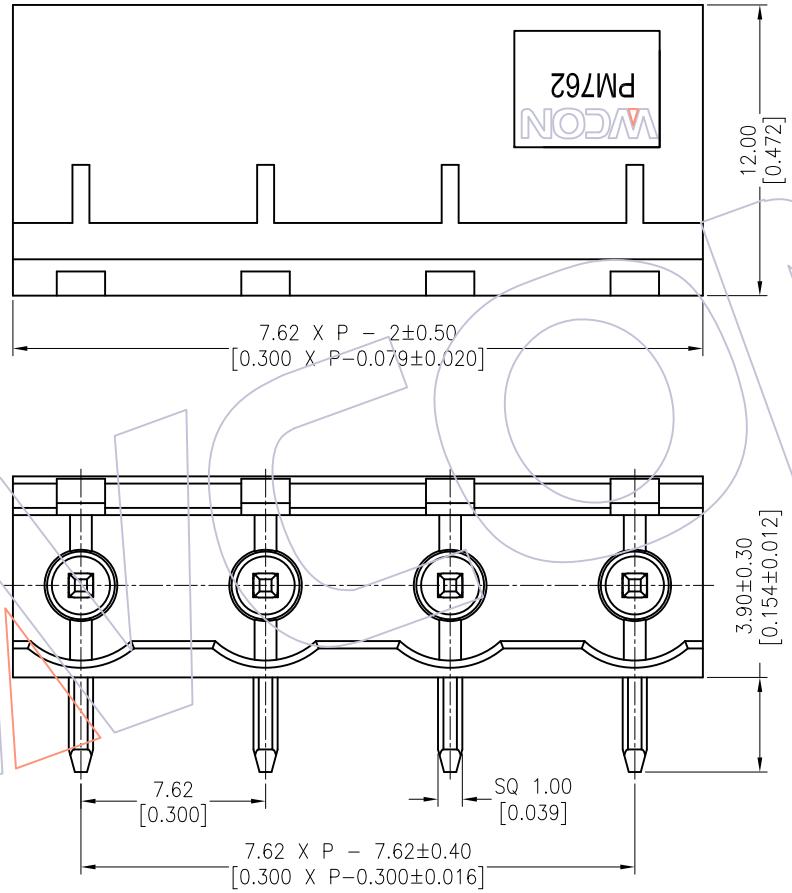

Recommended P.C.B Layout(Top Side)
(PCB BOARD TOLERANCE±0.05)

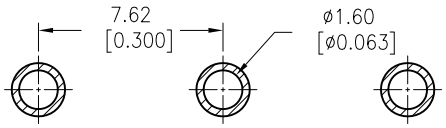

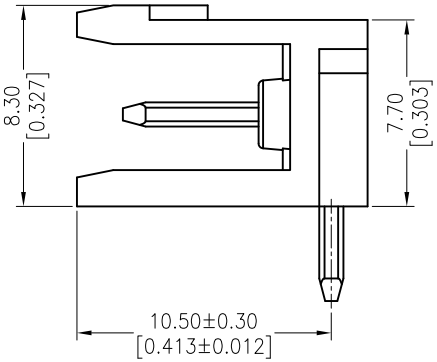

REV	DATE	MODIFICATION DESCRIPTION	CHANGE
A0	2013/10/24	NEW	——

OPERATION	
X.X	±0.40
X.XX	±0.25
X.XXX	±0.15
Angle	± 3°
DIM	TOL

DRAW	Tsingsn	DATE	2013/10/24
CHECK		DATE	
APPROVE		DATE	

SCALE	FIT
UNIT	mm / inch
SIZE	A4
SHEET	1/1
PROJ.	

PART NO. PM762−1RXXASM3

TITLE: 7.62mm Pitch Male Pluggable Terminal Blocks

Customer NO.

WCON
Http: www.wcon.com

WCON−Dongguan
Tel: +86 769 85358920
Fax: +86 769 85358915
E−mail: sales@wcon.com

WCON−Kunshan
Tel: +86 512 57468408
Fax: +86 512 57468468
E−mail: salesks@wcon.com